Combination Shower/Eyewash Stainless Steel Bowl

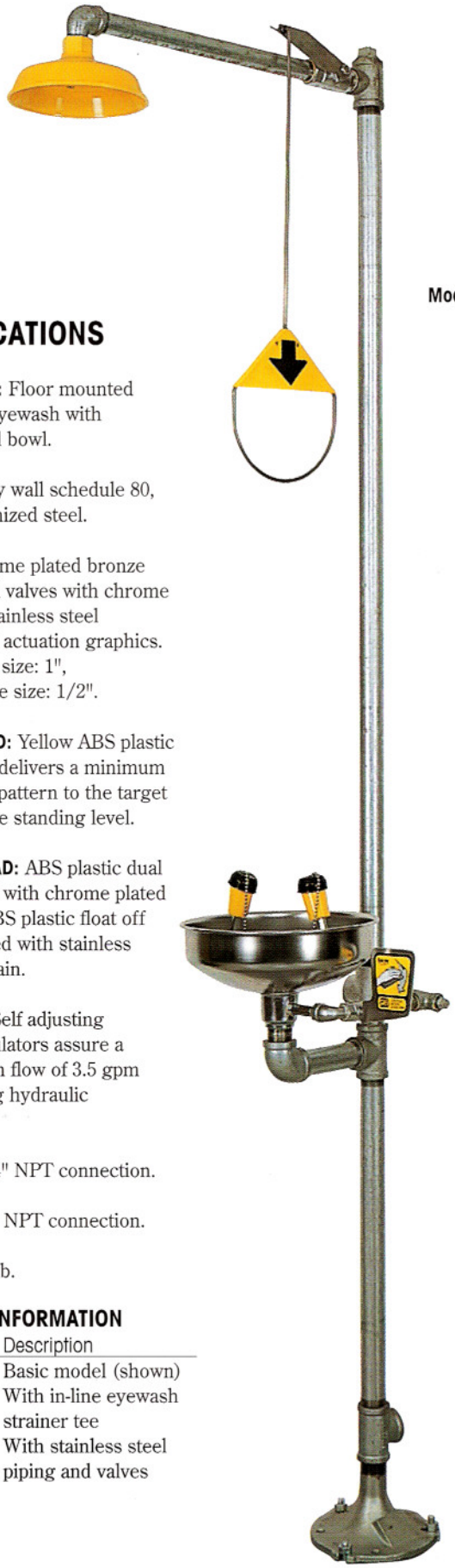

Model: 01050230

SPECIFICATIONS

INSTALLATION: Floor mounted shower and eyewash with stainless steel bowl.

PIPING: Heavy wall schedule 80, hot dip galvanized steel.

VALVES: Chrome plated bronze stay open ball valves with chrome plated ball, stainless steel actuators and actuation graphics. Shower valve size: 1", Eyewash valve size: 1/2".

SHOWER HEAD: Yellow ABS plastic shower head delivers a minimum 20" diameter pattern to the target area 60" above standing level.

EYEWASH HEAD: ABS plastic dual stream heads with chrome plated brass wye, ABS plastic float off covers secured with stainless steel bead chain.

REGULATOR: Self adjusting eyewash regulators assure a constant, even flow of 3.5 gpm under varying hydraulic conditions.

SUPPLY: 1-1/4" NPT connection.

WASTE 1-1/4" NPT connection.

SHIP WT.: 60 lb.

ORDERING INFORMATION

Model	Description
01050230	Basic model (shown)
01050231	With in-line eyewash strainer tee
01050232	With stainless steel piping and valves

7 x 11 SIGN INCLUDED

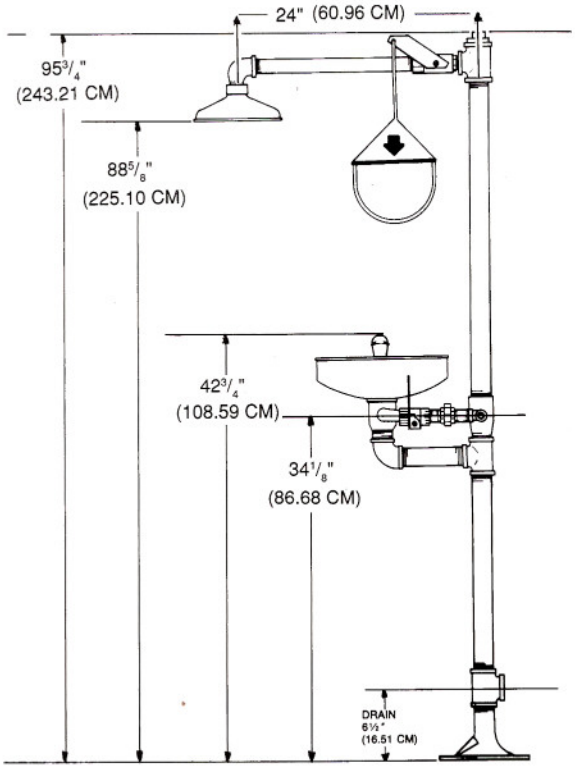

(Drawing Not to Scale)

GC898R ©Copyright Encon Safety Products 1998

Encon SAFETY PRODUCTS

SEI CERTIFIED MODELS Z358.1